Foundations of Artificial Intelligence

24. Constraint Satisfaction Problems: Backtracking

Malte Helmert

University of Basel

April 16, 2018

Constraint Satisfaction Problems: Overview

Chapter overview: constraint satisfaction problems:

- 22.–23. Introduction
- 24.–26. Basic Algorithms
  - 24. Backtracking
  - 25. Arc Consistency
  - 26. Path Consistency
- 27.–28. Problem Structure

CSP Algorithms

CSP Algorithms

In the following chapters, we consider algorithms for solving constraint networks.

basic concepts:

- search: check partial assignments systematically
- backtracking: discard inconsistent partial assignments
- inference: derive equivalent, but tighter constraints to reduce the size of the search space

Naive Backtracking

Naive Backtracking (= Without Inference)

function NaiveBacktracking($\mathcal{C}, \alpha$):

$\langle V, \mathrm{dom}, (R_{uv}) \rangle := \mathcal{C}$

if α is inconsistent with $\mathcal{C}$:
    return inconsistent

if α is a total assignment:
    return α

select some variable v for which α is not defined

for each $d \in \mathrm{dom}(v)$ in some order:
    $\alpha' := \alpha \cup \{v \mapsto d\}$
    $\alpha'' :=$ NaiveBacktracking($\mathcal{C}, \alpha'$)
    if $\alpha'' \neq$ **inconsistent**:
        return α''
return inconsistent

input: constraint network $\mathcal{C}$ and partial assignment α for $\mathcal{C}$
(first invocation: empty assignment $\alpha = \emptyset$)
result: solution of $\mathcal{C}$ or **inconsistent**

Is This a New Algorithm?

We have already seen this algorithm:
Backtracking corresponds to depth-first search (Chapter 12)
with the following state space:

- states: consistent partial assignments
- initial state: empty assignment $\emptyset$
- goal states: consistent total assignments
- actions: $assign_{v,d}$ assigns value $d \in \mathrm{dom}(v)$ to variable v
- action costs: all 0 (all solutions are of equal quality)
- transitions:
  - for each non-total assignment α,
    choose variable $v = \mathrm{select}(\alpha)$ that is unassigned in α
  - transition $\alpha \xrightarrow{assign_{v,d}} \alpha \cup \{v \mapsto d\}$ for each $d \in \mathrm{dom}(v)$

Why Depth-First Search?

Depth-first search is particularly well-suited for CSPs:

- path length bounded (by the number of variables)
- solutions located at the same depth (lowest search layer)
- state space is directed tree, initial state is the root
  $\rightsquigarrow$ no duplicates (Why?)

Hence none of the problematic cases for depth-first search occurs.

Naive Backtracking: Example

Consider the constraint network for the following graph coloring problem:

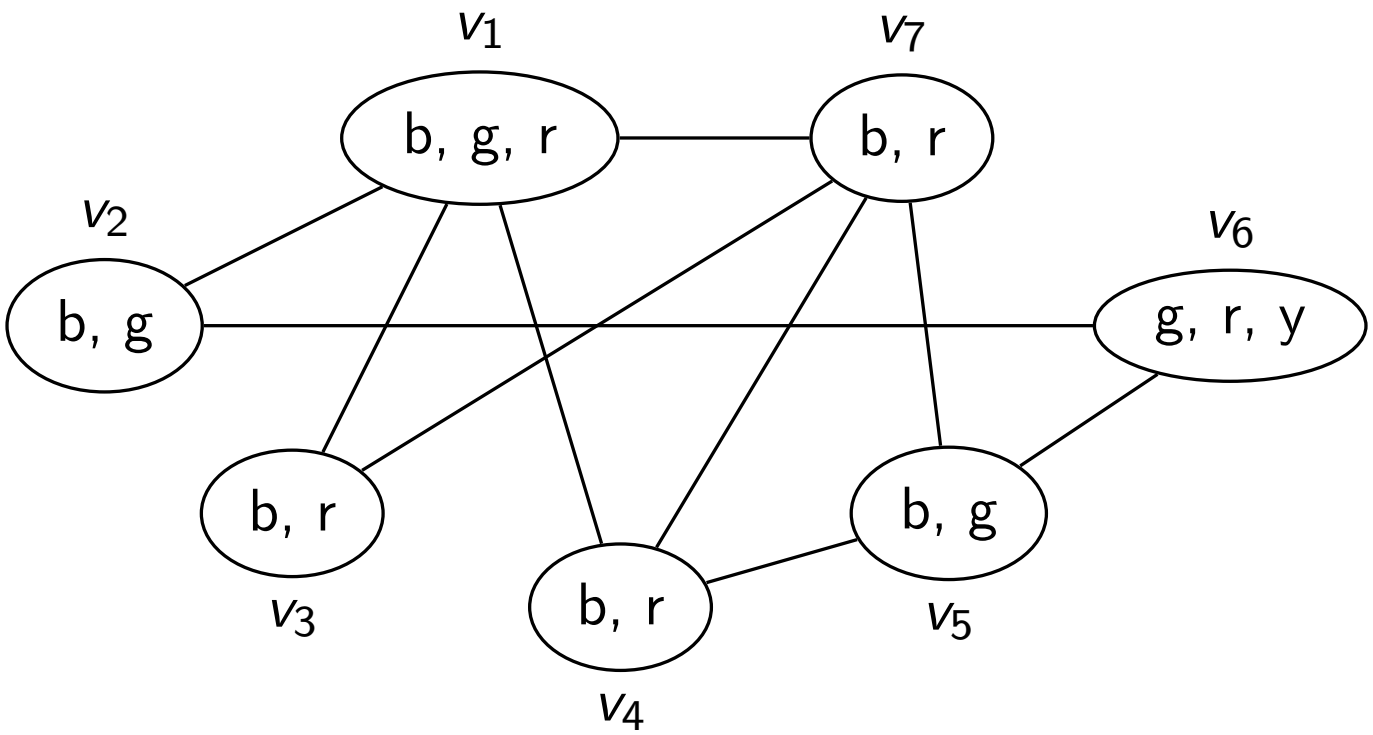

Naive Backtracking: Example

search tree for naive backtracking with

- fixed variable order $v_1, v_7, v_4, v_5, v_6, v_3, v_2$
- alphabetical order of the values

(without inconsistent nodes; continued at goal nodes)

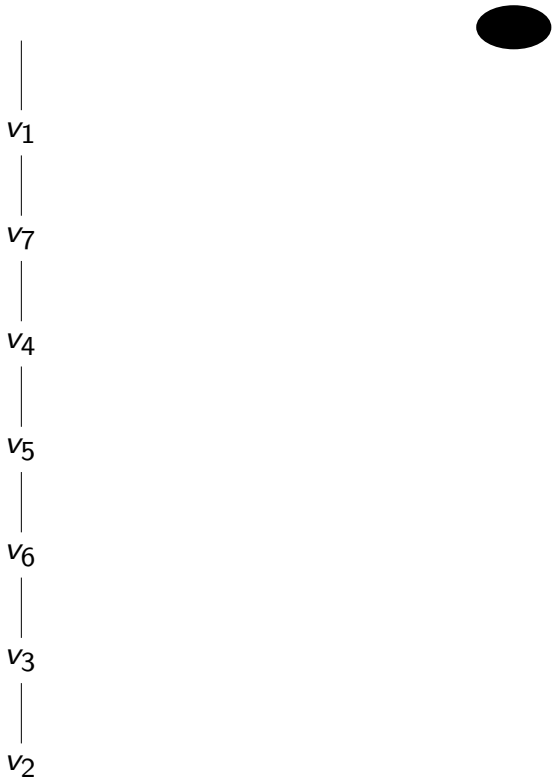

Naive Backtracking: Example

search tree for naive backtracking with

- fixed variable order $v_1, v_7, v_4, v_5, v_6, v_3, v_2$
- alphabetical order of the values

(without inconsistent nodes; continued at goal nodes)

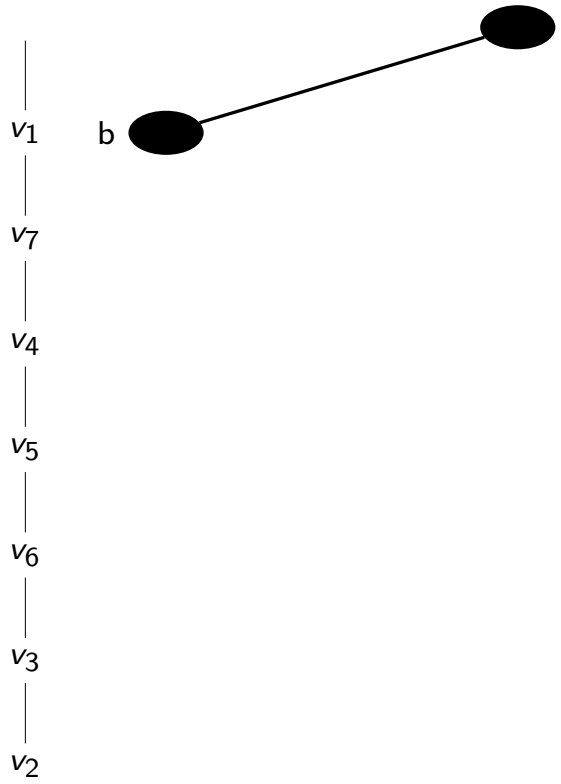

Naive Backtracking: Example

search tree for naive backtracking with

- fixed variable order $v_1, v_7, v_4, v_5, v_6, v_3, v_2$
- alphabetical order of the values

(without inconsistent nodes; continued at goal nodes)

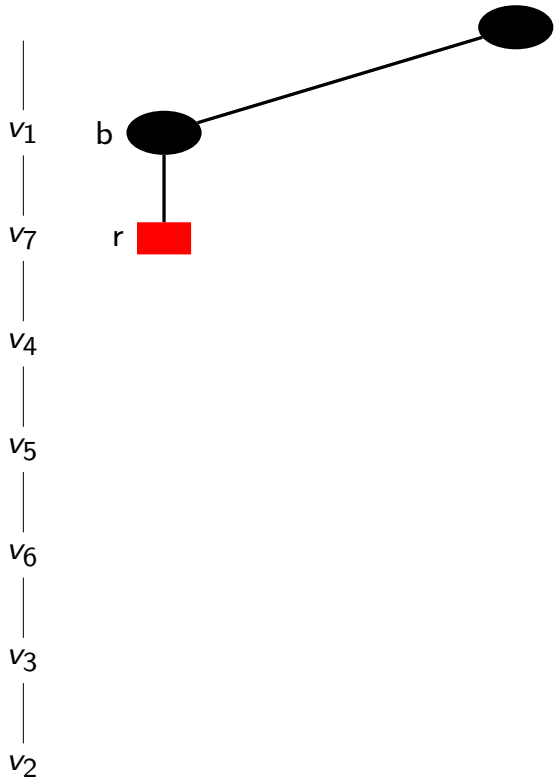

Naive Backtracking: Example

search tree for naive backtracking with

- fixed variable order $v_1, v_7, v_4, v_5, v_6, v_3, v_2$
- alphabetical order of the values

(without inconsistent nodes; continued at goal nodes)

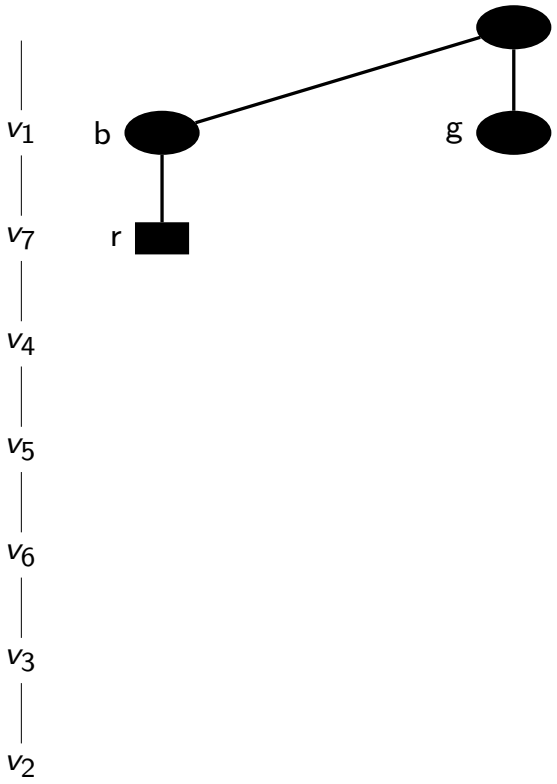

Naive Backtracking: Example

search tree for naive backtracking with

- fixed variable order $v_1, v_7, v_4, v_5, v_6, v_3, v_2$
- alphabetical order of the values

(without inconsistent nodes; continued at goal nodes)

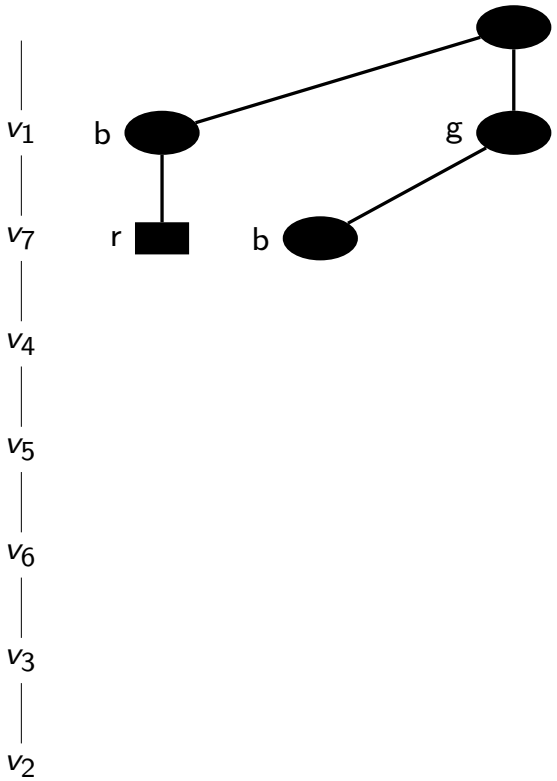

Naive Backtracking: Example

search tree for naive backtracking with

- fixed variable order $v_1, v_7, v_4, v_5, v_6, v_3, v_2$
- alphabetical order of the values

(without inconsistent nodes; continued at goal nodes)

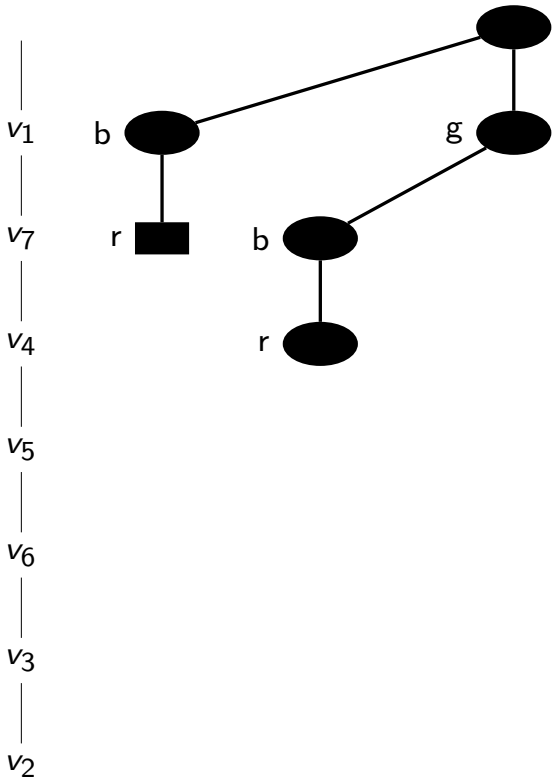

Naive Backtracking: Example

search tree for naive backtracking with

- fixed variable order $v_1, v_7, v_4, v_5, v_6, v_3, v_2$
- alphabetical order of the values

(without inconsistent nodes; continued at goal nodes)

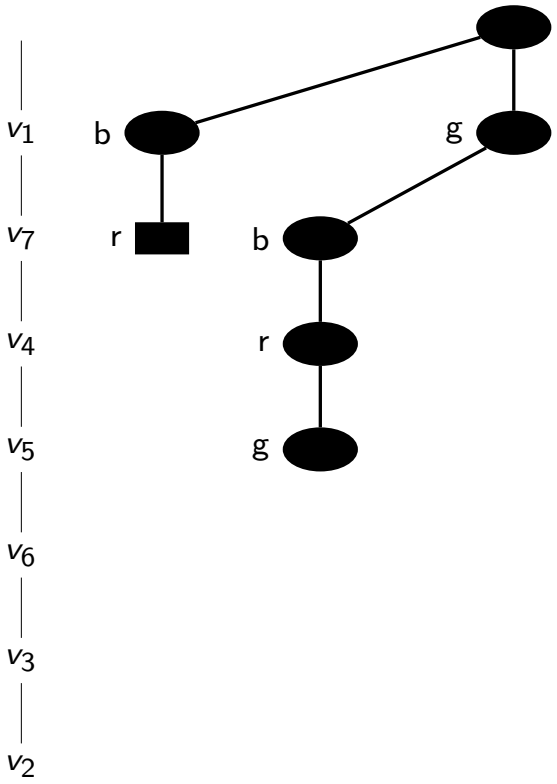

Naive Backtracking: Example

search tree for naive backtracking with

- fixed variable order $v_1, v_7, v_4, v_5, v_6, v_3, v_2$
- alphabetical order of the values

(without inconsistent nodes; continued at goal nodes)

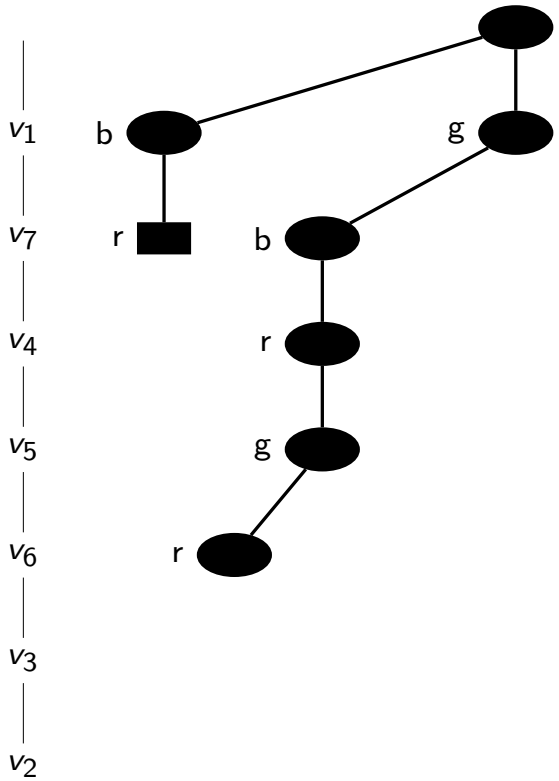

Naive Backtracking: Example

search tree for naive backtracking with

- fixed variable order $v_1, v_7, v_4, v_5, v_6, v_3, v_2$
- alphabetical order of the values

(without inconsistent nodes; continued at goal nodes)

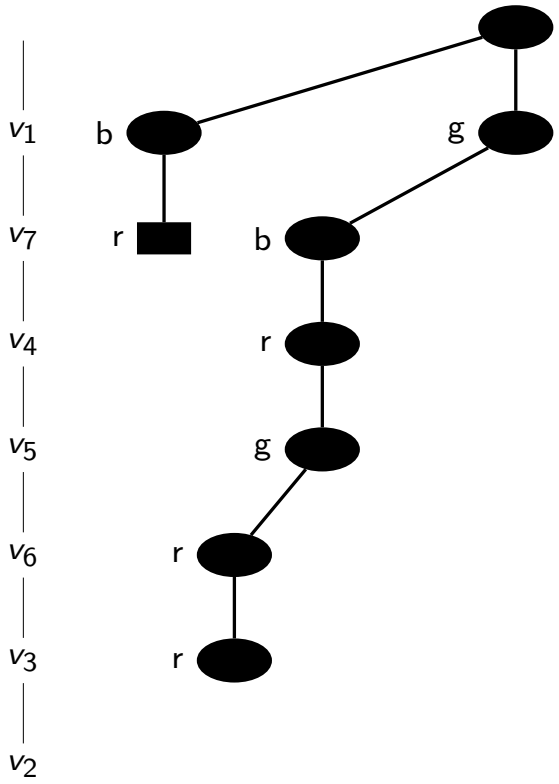

Naive Backtracking: Example

search tree for naive backtracking with

- fixed variable order $v_1, v_7, v_4, v_5, v_6, v_3, v_2$
- alphabetical order of the values

(without inconsistent nodes; continued at goal nodes)

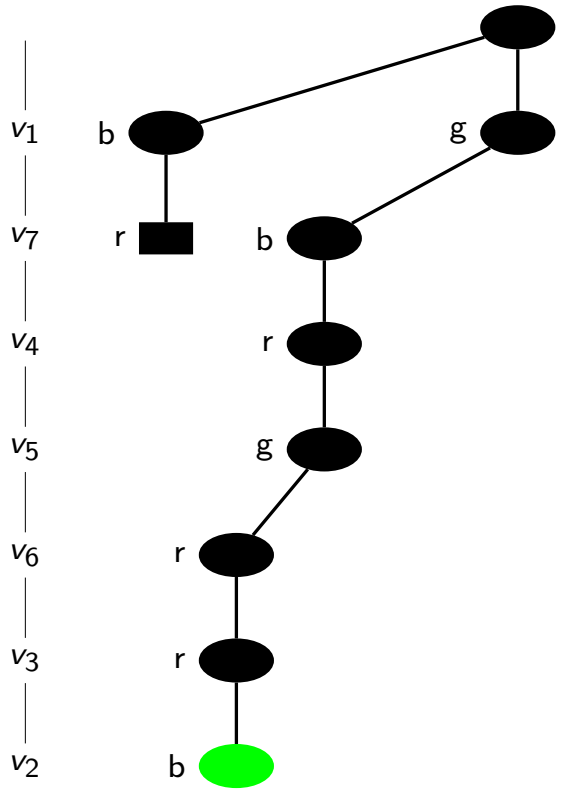

Naive Backtracking: Example

search tree for naive backtracking with

- fixed variable order $v_1, v_7, v_4, v_5, v_6, v_3, v_2$
- alphabetical order of the values

(without inconsistent nodes; continued at goal nodes)

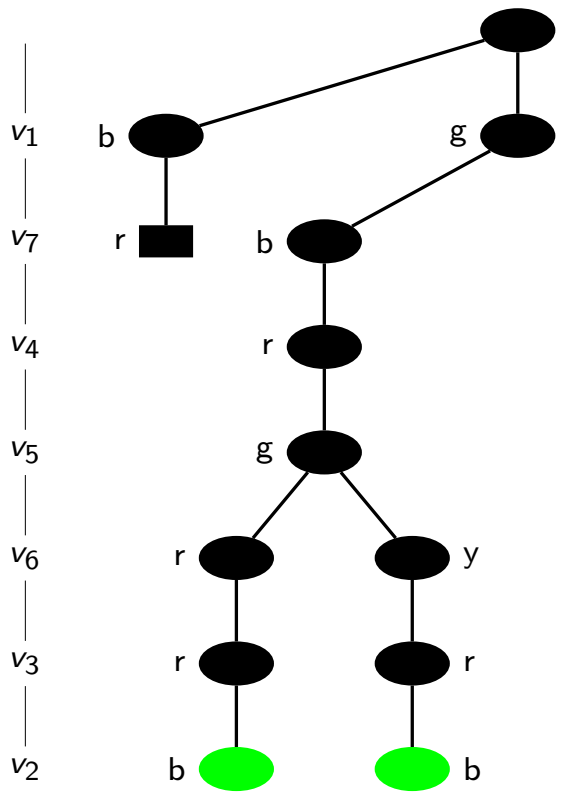

Naive Backtracking: Example

search tree for naive backtracking with

- fixed variable order $v_1, v_7, v_4, v_5, v_6, v_3, v_2$
- alphabetical order of the values

(without inconsistent nodes; continued at goal nodes)

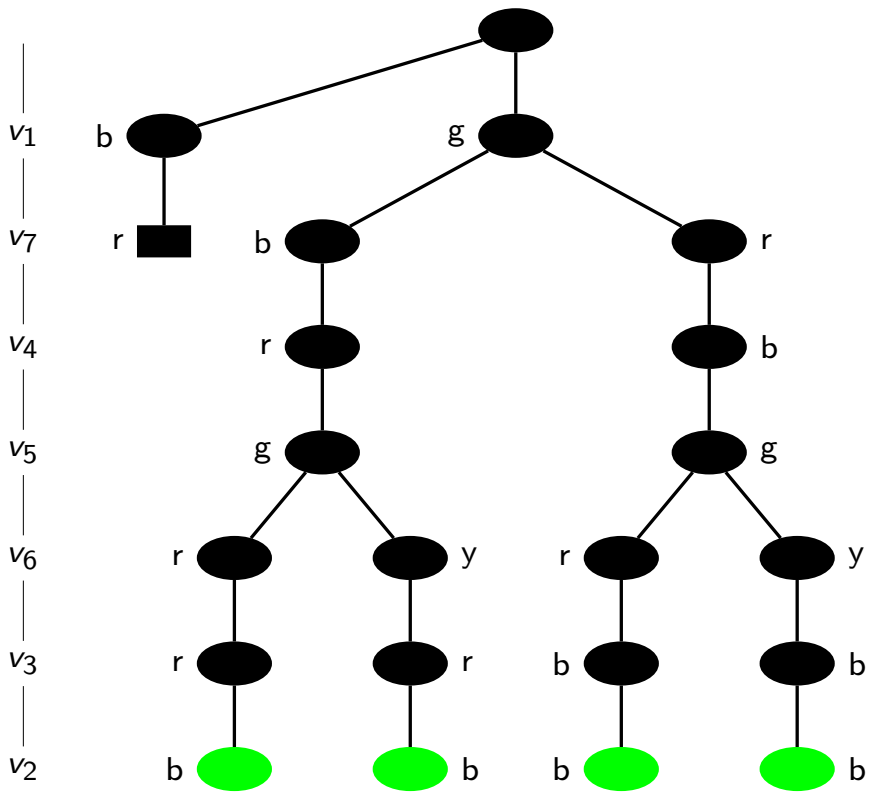

Naive Backtracking: Example

search tree for naive backtracking with

- fixed variable order $v_1, v_7, v_4, v_5, v_6, v_3, v_2$
- alphabetical order of the values

(without inconsistent nodes; continued at goal nodes)

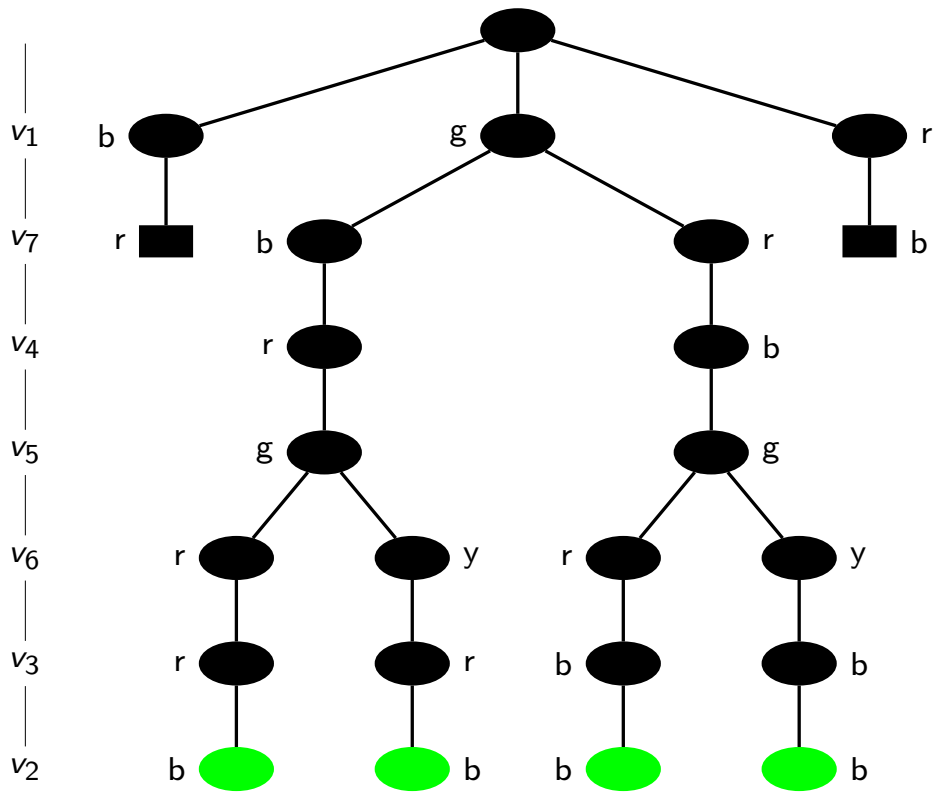

Naive Backtracking: Discussion

- Naive backtracking often has to exhaustively explore similar search paths (i.e., partial assignments that are identical except for a few variables).
- "Critical" variables are not recognized and hence considered for assignment (too) late.
- Decisions that necessarily lead to constraint violations are only recognized when all variables involved in the constraint have been assigned.

$\rightsquigarrow$ more intelligence by focusing on critical decisions and by inference of consequences of previous decisions

Variable and Value Orders

Naive Backtracking

function NaiveBacktracking($\mathcal{C}, \alpha$):

$\langle V, \text{dom}, (R_{uv}) \rangle := \mathcal{C}$

if α is inconsistent with $\mathcal{C}$:
    return inconsistent

if α is a total assignment:
    return α

select some variable v for which α is not defined

for each $d \in \text{dom}(v)$ in some order:
    $\alpha' := \alpha \cup \{v \mapsto d\}$
    $\alpha'' :=$ NaiveBacktracking($\mathcal{C}, \alpha'$)
    if $\alpha'' \neq$ **inconsistent**:
        return α''
return inconsistent

Variable and Value Orders

variable orders:

- Backtracking does not specify in which order variables are considered for assignment.
- Such orders can strongly influence the search space size and hence the search performance.
  $\rightsquigarrow$ example: exercises

German: Variablenordnung

value orders:

- Backtracking does not specify in which order the values of the selected variable v are considered.
- This is not as important because it does not matter in subtrees without a solution. (Why not?)
- If there is a solution in the subtree, then ideally a value that leads to a solution should be chosen. (Why?)

German: Werteordnung

Static vs. Dynamic Orders

we distinguish:

- static orders (fixed prior to search)
- dynamic orders (selected variable or value order depends on the search state)

comparison:

- dynamic orders obviously more powerful
- static orders $\rightsquigarrow$ no computational overhead during search

The following ordering criteria can be used statically, but are more effective combined with inference ($\rightsquigarrow$ later) and used dynamically.

Variable Orders

two common variable ordering criteria:

- minimum remaining values:
  prefer variables that have small domains
  - intuition: few subtrees $\rightsquigarrow$ smaller tree
  - extreme case: only one value $\rightsquigarrow$ forced assignment
- most constraining variable:
  prefer variables contained in many nontrivial constraints
  - intuition: constraints tested early
    $\rightsquigarrow$ inconsistencies recognized early $\rightsquigarrow$ smaller tree

combination: use minimum remaining values criterion,
then most constraining variable criterion to break ties

Value Orders

Definition (conflict)

Let $\mathcal{C} = \langle V, \mathrm{dom}, (R_{uv}) \rangle$ be a constraint network.
For variables $v \neq v'$ and values $d \in \mathrm{dom}(v)$, $d' \in \mathrm{dom}(v')$,
the assignment $v \mapsto d$ is in conflict with $v' \mapsto d'$ if $\langle d, d' \rangle \notin R_{vv'}$.

value ordering criterion for partial assignment α
and selected variable v:

- minimum conflicts: prefer values $d \in \mathrm{dom}(v)$
  such that $v \mapsto d$ causes as few conflicts as possible
  with variables that are unassigned in α

Summary

Summary: Backtracking

basic search algorithm for constraint networks: backtracking

- extends the (initially empty) partial assignment step by step until an inconsistency or a solution is found
- is a form of depth-first search
- depth-first search particularly well-suited because state space is directed tree and all solutions at same (known) depth

Summary: Variable and Value Orders

- Variable orders influence the performance of backtracking significantly.
  - goal: critical decisions as early as possible
- Value orders influence the performance of backtracking on solvable constraint networks significantly.
  - goal: most promising assignments first